EMCO-Simplatroll™

POWERMECH ENGINEERING

INDUSTRIAL ELECTROMAGNETIC BRAKES & CLUTCHES

CLUTCH BRAKE COMBINATIONS, BRAKE RECTIFIER, THRUSTOR BRAKES, BRAKE DISC, FRICTION DISC, BRAKE COILS, BRAKE SHOE WITH LINING.

Mobile: +91 9940429288 **Phone: (044) - 24715461, 42614058** **E-mail: info@powermechengineering.com**

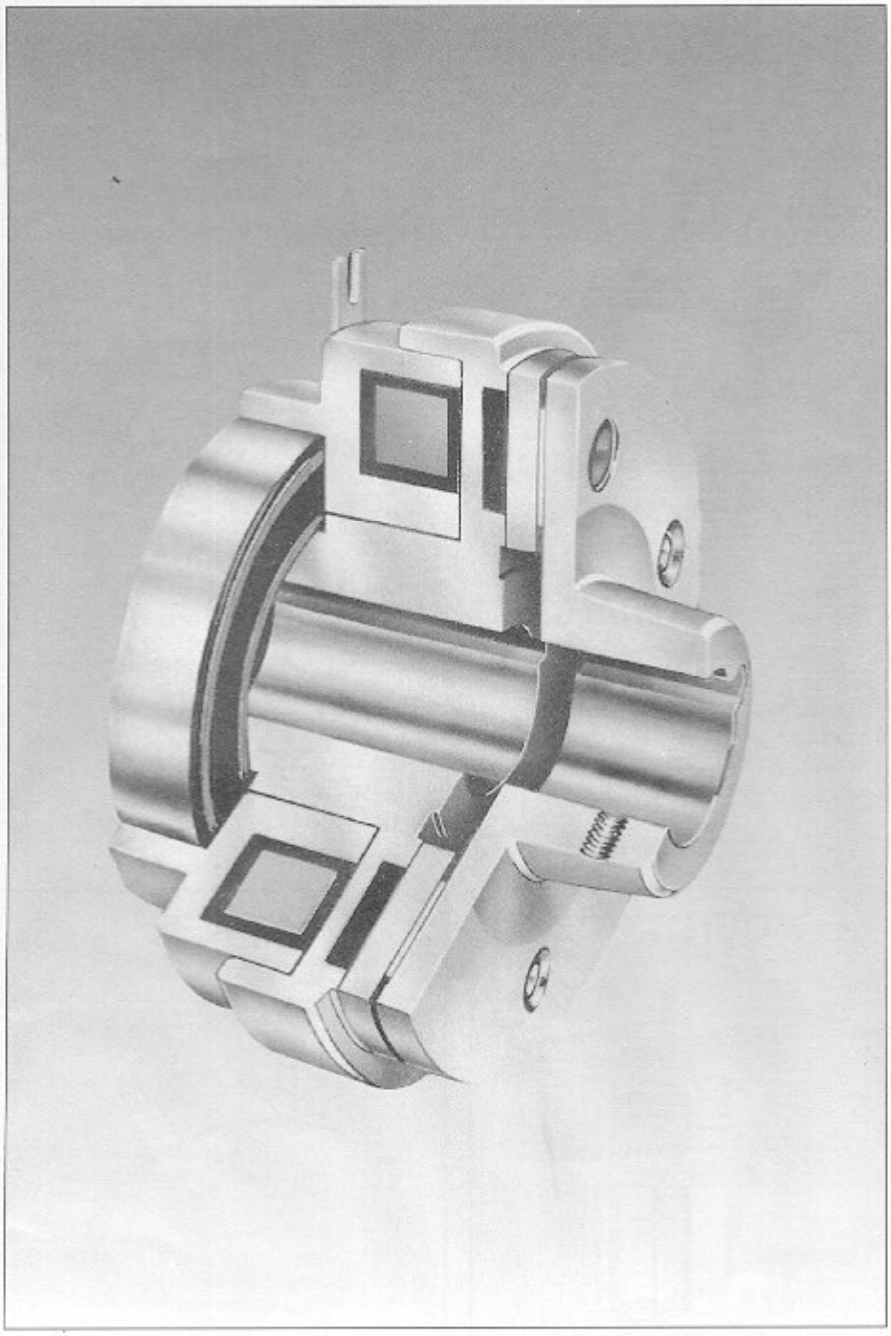

SHAFT MOUNTED
ELECTROMAGNETIC CLUTCH

(Normally Off)
Type 14. 105. □ □
Designs : 3.1 3.3 3.5

SALIENT FEATURES

Single Plate Dry Type.
Zero Backlash.
Residual-free.
Fast Switching Times.
High Operating Reliability.
High Operating Frequency.
Compact Dimensions.
Simple Construction.
Maintenance-Free.
Long Life.
Unique Pre-Stressed Spring.
Stationary Field (No Slip Rings).
Consistent Operating Characteristics.
Simple Wear Compensation Adjustment.
Slotted Armature For Torque Stability.
Coil with Class "F" Insulation.
Special Friction Material.
Simple installation.
Low Inertia Of Rotating Parts.
Raw Materials To DIN Standards.
No Restriction on Mounting Position,

Mobile: +91 9940429288 Phone: (044) - 24715461, 42614058 E-mail: info@powermechengineering.com

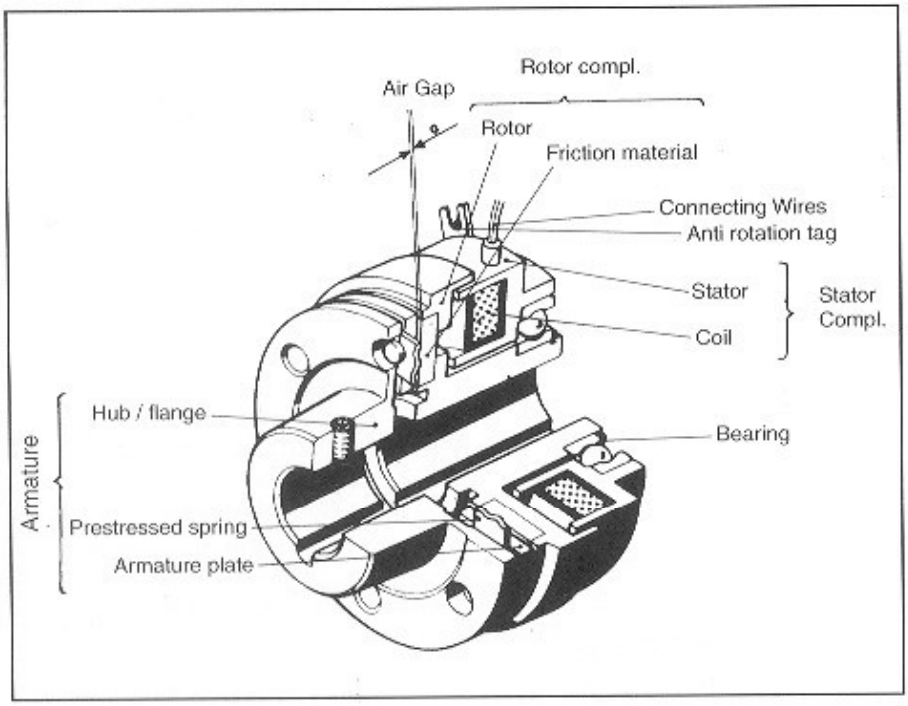

WORKING

When supplied with D. C. Voltage the armature is attracted towards the friction material of the rotor and transmits the torque free of backlash. When the supply is interrupted, the Prestressed spring pulls the armature back into its original position free of residual torque even when mounted vertically.

SWITCHING

Our Clutches require D.C. supply voltage which is obtained through A. C. / D. C. rectification. Normally switching is carried out on the A. C. side. However, for much faster engagement / disengagement time switching is carried out on the D. C. side for which a suitable arc suppressor and a capacitor is a must to protect the coil, switches etc. from high induction voltages produced during switching off power supply. Engagement/ disengagement time is a function of nominal release distance.(air-gap) and type of switching.

ORDERING INFORMATION

1. Type 2. Size 3. Design
4. Bore of Armature
5. Bore of Rotor. 6. Voltage

POWERMECH ENGINEERING

COMPONENTS

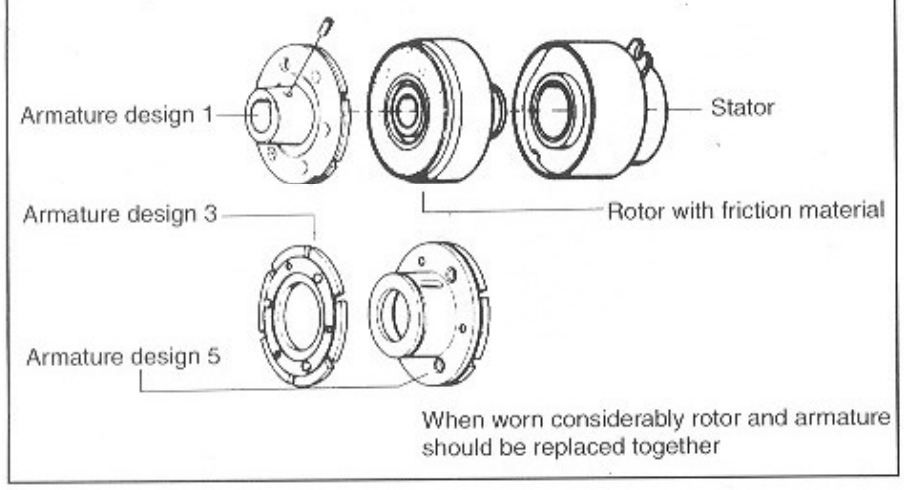

SWITCHING

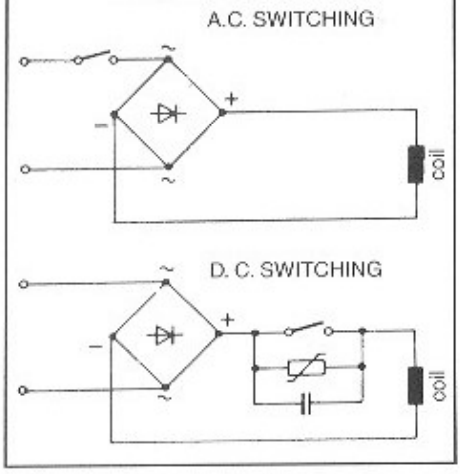

MOUNTING

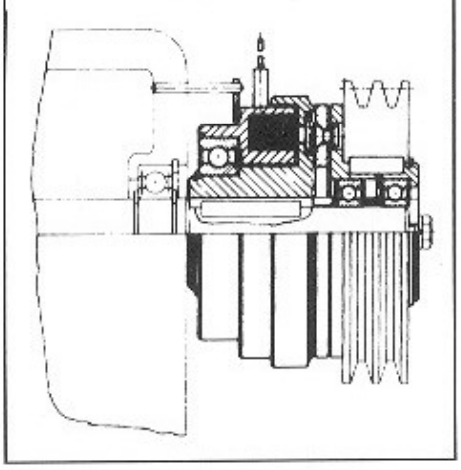

VIEW "x"

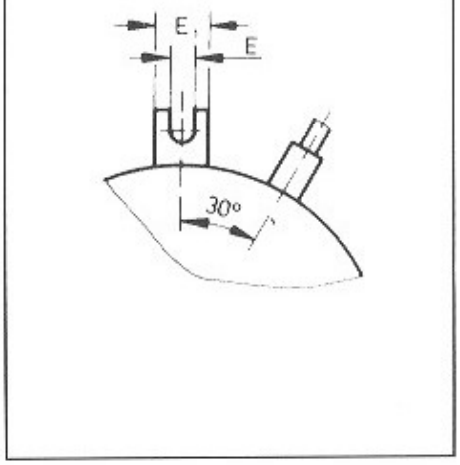

POWERMECH ENGINEERING

DIMENSIONS

Design 3.1

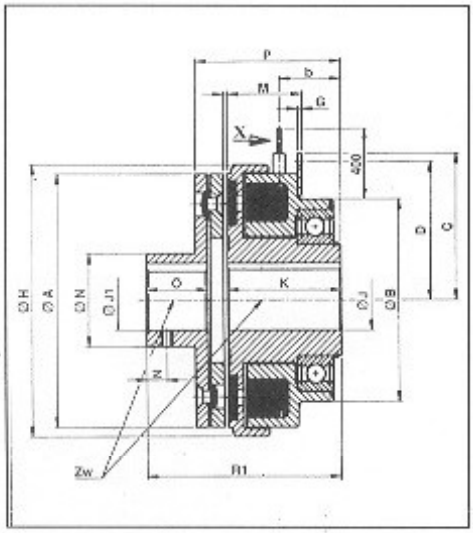

Design 3.3

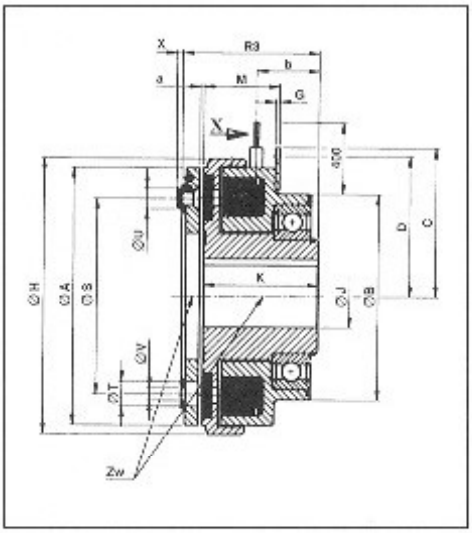

Design 3.5

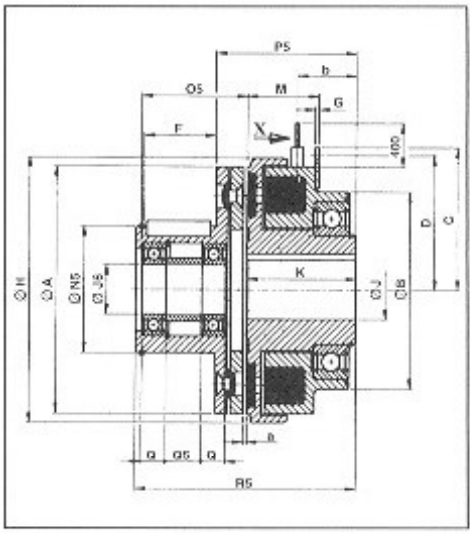

Tapped holes on dimension 'Z' on request.

Mobile: +91 9940429288 **Phone: (044) - 24715461, 42614058** **E-mail: info@powermechengineering.com**

PARAMETERS

Size			06	08	10	12	16	20	25
Torque		Ms [Nm]	7.5	15	30	60	120	240	480
Max. Speed		[min⁻¹]	8000	6000	5000	4000	3000	3000	2000
Input Power		P_{S1} [W]	15	20	28	35	50	68	85
Inertia	Rotor	[kg cm²]	1.33	2.94	8.66	24.6	69	215	566
	Armature 1	[kg cm²]	0.6	1.71	6.64	16	63.3	190	480
	Armature 3	[kg cm²]	0.42	1.18	4.72	13	48	137	358
	Armature 5	[kg cm²]	0.92	2.82	9.2	25.8	86.8	258	720
Permissible misalignment		Zw [mm]	0.05	0.05	0.05	0.05	0.1	0.1	0.1
	Ø A		63	80	100	125	160	200	250
	Ø B		64	68	85	100	127	151.5	152.4
	Ø C		41	50	61	72.5	99	119	145
	Ø D		37	46	57	68.5	93	113	139
	Ø E		4.1	4.1	4.1	4.1	8.1	8.1	8.1
	E		10	12	14	14	20	20	20
	F		17	22	27	36.5	44.4	53.4	63.5
	G		1.5	1.5	2.5	2.5	3.5	3.5	3.5
	Ø H		68	85.5	107	134.3	170	214.3	266.5
	K		40	43.5	49	55	61.5	74	81
	M		26	28	32.5	36	41.7	48.1	55.2
	Ø N		27	32	42	49	65	83	105
	Ø N_{js}		38	45	55	64	75	90	115
	O		15	20	25	30	38	48	55
	O_5		22.7	32.2	39.4	51.5	63	77.9	91.9
	P		47.5	52	60	68	77.5	94.4	105
	P_5		47	52	60	68	77.5	95.4	105
	Q		8	9	12	12	13	15	19
	Q_5		4	5.5	6.5	18	28	34	38
	R_1		59	68	80	92	108.5	133.5	149
	R_5		44	48	54.9	62	70.5	85.4	93.9
	R_3		67	77	90	108	127.5	155.4	175
	Ø S		46	60	76	95	120	158	210
	Ø T		3 x 6.3	3 x 8	3 x 10.5	3 x 12	3 x 15	3 x 18	3 x 22
	Ø U		3 x 5.5	3 x 7	3 x 9	3 x 10	3 x 13	3 x 16	3 x 20
	Ø V		3 x 3.1	3 x 4	3 x 5.15	3 x 6.1	3 x 8.2	3 x 10.2	3 x 12.2
	X		1.4	1.7	2.1	2.5	3	4	4.3
	Z		5	6	6	10	10	15	20
	a		0.2	0.2	0.2	0.3	0.3	0.5	0.5
	b		22	24	27.5	29.5	35	42.5	45.5
	Ø J^{H7}	*	10,15	17,20	20,25,30	20,25,30	25,30,40	40,45,50	40,45,50
		***	20	25	30	40	50	60	60
	Ø J_1^{H7}	*	10	10	14	14	20	25	25
		**	10,12,15	14,17,20	20,25,28	25,28,30	30,35,40	40,45,50	40,50,60
		***	17	20	30	50	45	60	80
	Ø J_6^{h7}		12	15	20	50	30	40	45

Also available following clutches

Size	Torque (Nm)
31	630
40	1250
50	2500

Please call for more details

⊗ Circlip grooves to DIN 472

* pilot bore, no keyway Ø J_1
** standard bores
*** max. bores

IMPORTANT : 1Nm = 0.102 kgm = 0.737 lb. ft.
Standard voltages : 24 V. D. C.; 96 V. D.C.; 190 V. D. C.
Other voltages on request

Keyways to IS : 2048 wherever possible otherwise to DIN standard
Specifications are subject to change without notice

SIZE SELECTION

Approximate necessary Torque or Size of a unit for applications involving low inertia, low operating frequency etc. is determined as :

TORQUE = [9550 x (K.W. / SPEED)] x SAFETY FACTOR [K]

SAFETY FACTOR [K]

To ensure necessary transmission safety also under extreme operating conditions adequate safety factor must be considered, the value of which depends on operating conditions namely, the type of load, prime mover etc.

TYPICALLY	[K]
For Electric Drive	
Low masses, equal loading & non-intermittent operation	[2.0]
Low masses, light shock load & intermittent operation	[2.5]
Medium masses, light shock load & intermittent operation	[3.0]
Large masses, strong shock load & intermittent operation	[4.0]
Non-Overhauling Loads	[2-3]
Overhauling Loads	[3-4]
Diesel Engine Drive	[4-5]
Compressor Driven	[5-6]

However, we recommend you to perform detailed calculations for which please consult us.

LIFE

The life of the friction liner depends on a number of factors namely, the inertia to be retarded or stopped, the relative speed, the operating frequency, the temperatures at the friction surfaces etc.

These brakes must run dry. Oil, grease, foreign materials, similar such lubricant affect life and characteristics of friction materials. No general statement can be made about life of friction materials.

POWERMECH ENGINEERING

Phone : 044 - 42614058
: 044 - 24715461
Mobile : 9940429288
E-mail : info@powermechengineering.com
Website : www.powermechengineering.in

OUR OTHER PRODUCTS

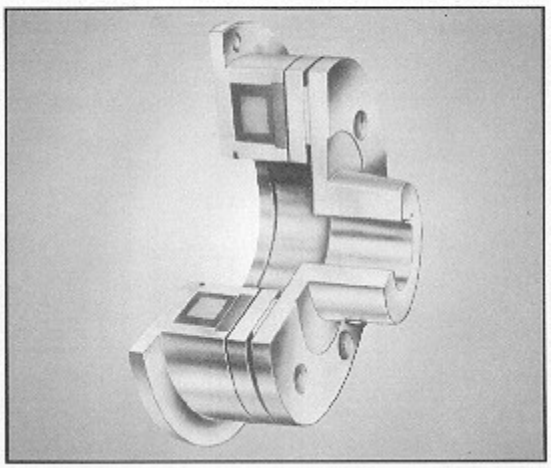

(1) Flange Mounted Electromagnetic Brake (Normally off)
Type 14.112 & 14. 115
Torque upto 2500 Nm.

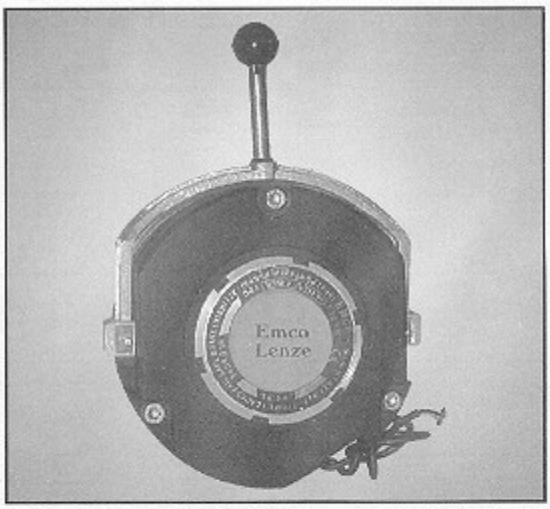

(2) D.C. Fail Safe Brake (Normally on)
Type 14.458
Torque upto 800 Nm.

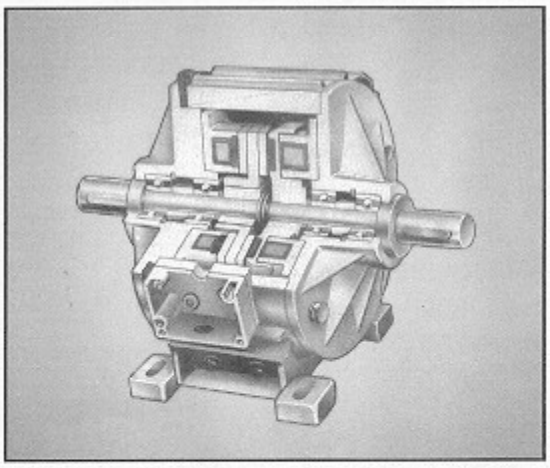

(3) Split Shaft Clutch/Brake Combination (Normally off)
Type 14.125
Type 14.137 (Open)
Torque upto 2500 Nm.

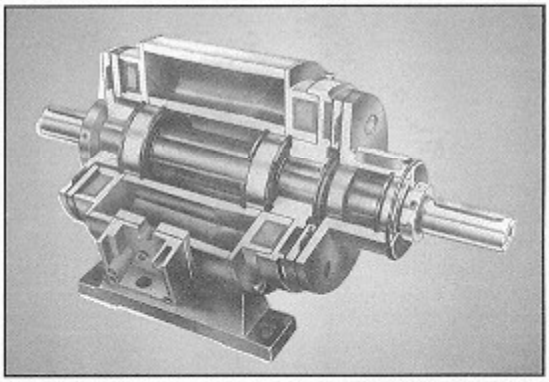

(4) Single Shaft Clutch-Brake / Double Clutch Combination (Normally off)
Type 14.121 & 14.128
Torque upto 2500 Nm.