POWERMECH ENGINEERING

e-mail: info@powermechengineering.com | Mobile: 9940429288

EMCO® & EMCO-Simplatroll®

making machines friendly

*The brands **Emco** & **Emco-Simplatroll** stand for uncompromised quality in products as well the services. Products that are safe & reliable and service that makes our products and your machines perform efficiently.*

EOT CRANE PARTS & ACCESSORIES

Brakes	▸ Electro Hydraulic Thrustor Brakes & Thrustors ▸ Electromagnetic Fail-Safe Disc Type **PETHE** Brakes ▸ Electromagnetic Solenoid Drum Type **BCH** Brakes ▸ **Temporiti** Electromagnetic Fail-Safe Brakes ▸ **EMCO SIMPLATROLL** Brakes, Clutches, Clutch with Brake Combinations
Brake Spare Parts	▸ Brake Coils, AC Solenoids & Brake Solid State Rectifiers ▸ Brake Discs, Brake Shoe with lining, Brake Drums & Brake Drum Couplings
Brake Linings	▸ Brake Lining in Roll / Sheet Form, Friction Discs (Metal woven & Non-metallic based)
Push Button Pendant Stations	▸ Pendant Stations with Single/Dual Speed, IP-65, Mechanical Interlock, Single/Double Row
DSL Shrouded Bus Bar Systems SafeTrack & SAFELINE	▸ 35A, 95A, 60A, 100A, 125A, 160A, 200A, 250A, 315A, 400A, 500A, 800A up to 2000Amps (G.I, Copper, Aluminium & S.S) and other range.
Current Collectors SafeTrack & SAFELINE	▸ Copper Shoe, Current collectors (100A, 125A, 250A, 20A, 25A, 40A, 50A, 60A, 500A) for Shrouded DSL bus bar, Current Collectors in Cast Iron, Cast Steel, Brass & Bronze Shoes with Porcelain Insulators for Angle Iron Bus Bar
DSL Indication Lamp	▸ Heavy Duty for EOT Cranes
Festoon Cable Track Systems	▸ C-Rail Festoon Cable Track System with Cable Trolleys and Accessories for Crane, Transfer Car and Material Handling Equipment Applications
Festoon Cable Trolleys	▸ Wire Rope Cable Trolleys (Plastic/Steel) ▸ Medium / Heavy Duty I-beam Steel Cable Trolleys (to suit on customer's I-beam / 'T' Channel)
Crane Cables	▸ Flat Festoon Cables for Cranes and Material Handing Equipments ▸ Pendant Round Cable (with dual strain relief steel wire) for Cranes
Cable Reeling Drums	▸ Spring / Motorised Cable Reeling Drums for moving Machines / Cranes
Limit Switches	▸ Rotary Geared Limit Switches for Hoisting ▸ Worm Drive Rotary Geared Limit Switches for Hoisting ▸ Counter Weight (Gravity) Limit Switches for hoisting ▸ Lever Roller Limit Switches for Long / Cross travel
Anti Crane Collision Device	▸ Range: From 3 meters upto 16 meters (with Reflectors)
Master Controllers	▸ Enclosure in Sheet Steel (IP-44) / Aluminium Die Cast (IP-54) Body
Crane Mechanical Spares	▸ Rope Guides, Rope Drums, Crane wheels, L-Block, Gears & Axles, Rope Drum Bearings, Pull Push or Geared Trolleys
Couplings & Brake Drum	▸ Geared Couplings, Brake Drum Couplings (Pin Push type & Geared type)
Crane Buffer	▸ Rubber Buffer and Spring-Loaded Crane Buffer
Crane Hook Pulley Block	▸ 1 ton upto 150 ton capacity Snatch Hook Pulley Block (with Govt. Lab test certificate), Crane Hooks, Safety Latches and Spare Sheave Pulleys

POWERMECH ENGINEERING

EMCO-Simplatroll®

DC Electromagnetic Brakes & Clutches

Other Products:

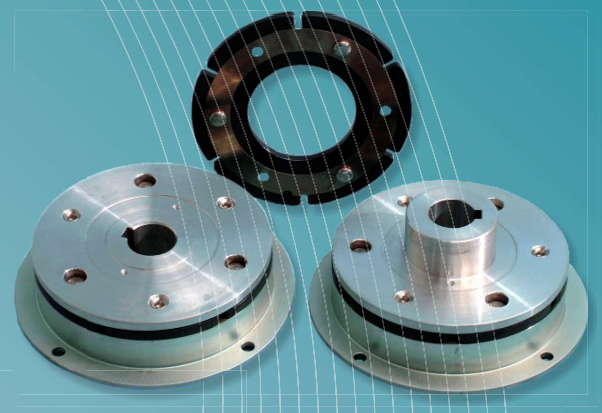

Type **14.115**
Flange Mounted Brakes
(Normally OFF)

CE

Type **14.105**
Flange & Shaft Mounted Clutches
(Normally OFF)

POWERMECH ENGINEERING

E-mail: info@powermechengineering.com
Phone: 044 - 42614058, 24715461
Mobile: 9940429288

POWERMECH ENGINEERING
e-mail: info@powermechengineering.in | Ph: 044 - 42614058, 24715461

Emco Simplatroll *DC Electromagnetic* ***Brakes*** *(Flange Mounted) and* ***Clutches*** *(Flange & Shaft Mounted) are designed for high consistent operating characteristic with a torque range of 7.5-2500 Nm. They are available in 3 different designs to stop/connect the drive or load side either shaft, pulley and sprocket. They are maintenance free and provided with a unique pre-stressed spring made from German spring steel and a coil with class 'F' insulation to give million of operations without fatigue.*

Salient Features of **Type 14.115**

- Torque : 75 Nm to 2500 Nm
- Single Plate Dry Type
- Zero Backlash
- Residual-free
- Fast Switching Times
- High Operating Reliability
- High Operating Frequency
- Compact Dimensions
- Simple Construction
- Maintenance Free
- Long Life
- Unique Pre-stressed Spring
- Coil with Class 'F' Insulation#
- Stationery Field (No Slip Rings)
- Non Asbestos Special Friction Material*
- Consistent Operating Characteristics
- Simple Wear Compensation Adjustment
- Simple Installation
- Low Inertia of Rotating Parts
- No Restriction on Mounting Position

14.105 Brake

Salient Features of **Type 14.105**

- Torque : 75 Nm to 2500 Nm
- Single Plate Dry Type
- Zero Backlash
- Residual-free
- Fast Switching Times
- High Operating Reliability
- High Operating Frequency
- Compact Dimensions
- Simple Construction
- Long Life
- Unique Pre-stressed Spring
- Stationery Field (No Slip Rings)
- Consistent Operating Characteristics
- Simple Wear Compensation Adjustment
- Coil with Class 'F' Insulation#
- Asbestos-free Friction Materials*
- Simple Installation
- Low Inertia of Rotating Parts
- Raw Materials to DIN Standards
- No Restriction on Mounting Position

*# Higher coil insulation available on request. * Standard Indian liner. German liner available on request.*

Type 14.115 Brake
Flange Mounted (Normally OFF)

Type 14.105 Clutch
Flange & Shaft Mounted (Normally OFF)

e-mail: info@powermechengineering.in | M: 9940429288
POWERMECH ENGINEERING

Components
exploded view

Type **14.115/112.1**

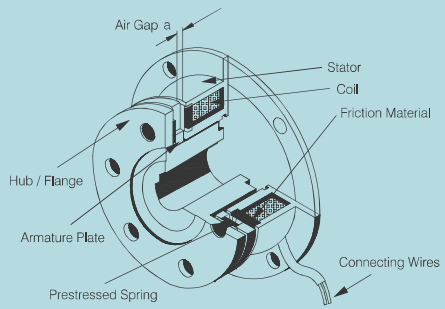

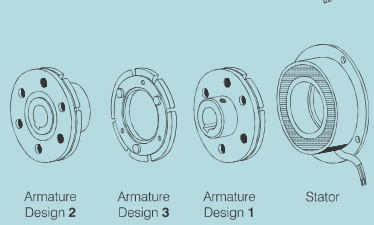

Type **14.105/102.2**

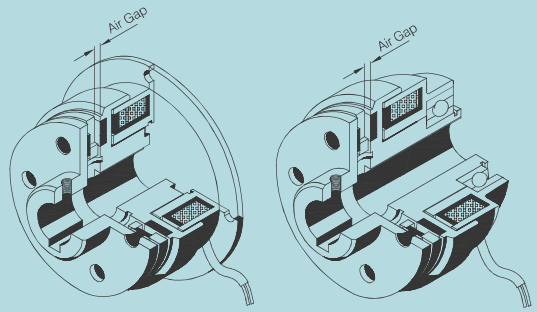

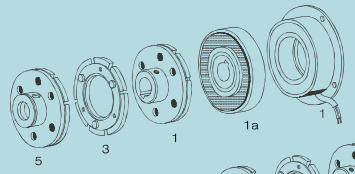

Type **14.105/102.2**

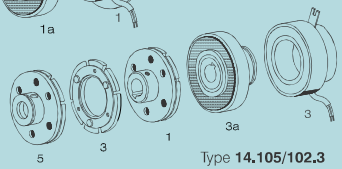

Type **14.105/102.3**

Mounting
Type **14.115**

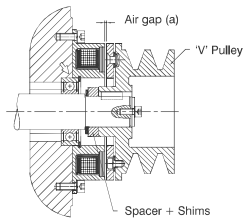

Combination of the 115-1.3 and 'V' Pulley

Switching

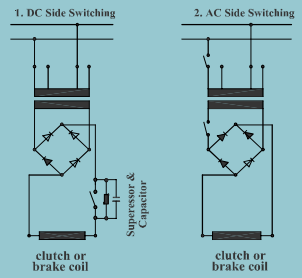

Our Brakes & clutches require DC supply voltage which is obtained through AC/DC rectification. Normally switching is carried out on the AC side.

However, for much faster engagement /disengagement time switching is carried out on the DC side for which a suitable arc suppressor and a capacitor is a must to protect the coil, switches etc. from high induction voltages produced during switching off power supply.

Engagement /disengagement time is a function of nominal release distance (airgap) and type of switching.

Mounting
Type **14.105**

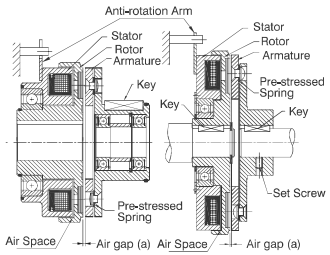

Structure of the Bearing mounted type (105 model)

Working
Type **14.115**

When supplied with DC voltage the armature is attracted towards the friction material of the rotor and transmits the torque free of back-lash. When the supply is interrupted, the pre-stressed spring pulls the armature back into its original position free of residual torque even when mounted vertically.

Working
Type **14.105**

When supplied with DC voltage the armature is attracted towards the friction material of the stator and the friction causes the rotating component to stop. When the supply is interrupted, the pre-stressed spring pulls the armature back into its original position free of residual torque even when mounted vertically.

POWERMECH ENGINEERING

Type **14.115** (Normally OFF)

Dimensions

Design **1.1**

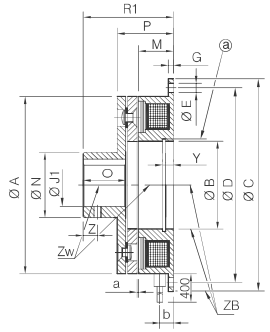

Design **1.3**

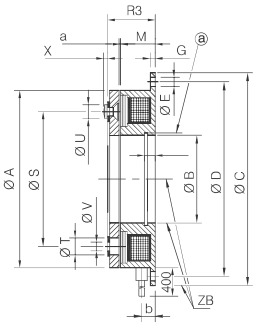

Design **1.2**

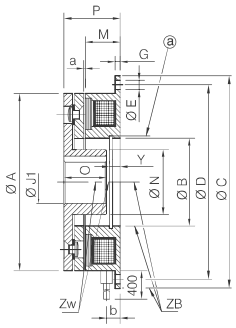

Tapped holes shown on dimension 'Z' on request,

Parameters

All dimensions are in mm

Size		06	08	10	12	16	20	25
Torque	M RAT. (Nm)	7.5	15	30	60	120	240	480
Max Speed	[min⁻¹]	8000	6000	5000	4000	3000	3000	2000
Input Power	P20 [w]	11.5	16	21	28	38	45	70
Inertia [kg cm²]	Armature ½	0.6	1.71	6.64	18.0	63.3	190	480
	Armature 3	0.42	1.18	4.72	13	48	137	358
Permissible Misalignment	Zw (mm)	0.08	0.08	0.08	0.1	0.1	0.1	0.15
	ZB (mm)	0.2	0.2	0.2	0.2	0.3	0.3	0.3
	ØA	63	80	100	125	160	200	250
	ØB H8	35	42	52	62	80	100	125
	ØC h9	80	100	125	150	190	230	290
	ØD	72	90	112	137	175	215	270
	ØE	4 x 4.5	4 x 5.5	4 x 6.6	4 x 6.6	4 x 9	4 x 9	4 x 11
	G	2	2.5	3	3.5	4	5	6
	M	18	20	22	24	26	30	35
	ØN	27	32	42	49	65	83	105
	O	15	20	25	32	38	48	55
	P	25.5	28.5	32.9	37	42	50.4	58.9
	R 1	37	44.5	52.9	61	73	89.4	102.9
	R 3	22	24.5	27.9	31	35	41.4	47.9
	ØS	46	60	76	95	120	158	210
	ØT	3 x 6.3	3 x 8	3 x 10.5	3 x 12	3 x 15	3 x 18	4 x 22
	ØU	3 x 5.5	3 x 7	3 x 9	3 x 10	3 x 13	3 x 16	4 x 20
	ØV	3 x 3.1	3 x 4.1	3 x 5.1	3 x 6.1	3 x 8.2	3 x 10.2	4 x 12.2
	X	1.4	1.7	2.1	2.5	3	4	4.3
	Y	3.5	4.3	5	5.5	6	7	8
	Z	5	6	6	10	10	15	20
	a	0.2	0.2	0.2	0.3	0.3	0.5	0.5
	b	6.3	6.3	6.3	6.8	8.8	12.4	14.9
	$ØJ_1^{H7}$ *	10	10	14	14	20	25	25
	$ØJ_1^{H7}$ **	10,12,15	15,17, 20	20, 25, 28	25, 28, 30	30, 35, 40	40, 50, 55	40, 50, 60
	$ØJ_1^{H7}$ ***	17	20	30	35	42	60	60

Important :

- Standard voltages : **24** VDC; **96** VDC; **190** VDC (Other voltages on request.)
- **P** : Coil Power at 20° C
- Permissible voltage change **+5%** to **-10%**
- Keyways to IS : 2048 wherever possible otherwise to DIN Standard
- @Circlip grooves to DIN 472
- Also available following Brakes

Size	Torque
31	630
40	1250
50	2500

- **Please call us for more details.**

* pilot bore, no keyway
** Standard bores
*** Max. bores

Specifications are subject to change without notice.

Pre-stressed Spring before installation

Pre-stressed Spring

This is a ring shaped thin plate spring of simple construction. Tens of millions of ON-OFF operations will not cause permanent set in fatigue or cracking. Nor will it be broken by rust or erosion, being fabricated out if special steel material.

It is pre-stressed and of a special WVE shape design, providing strong spring force that is durable against long-term use, and stable performance.

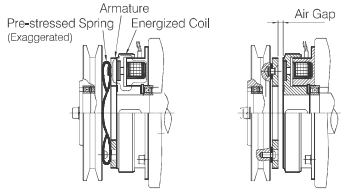

(1) Energized and Coupled (2) Released

Operation of Clutch

e-mail: info@powermechengineering.in
Ph: 044 - 42614058, 24715461

POWERMECH ENGINEERING

Type **14.105** (Normally OFF)

Dimensions

Design **1.1**

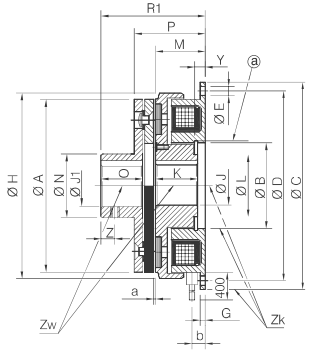

Design **1.3**

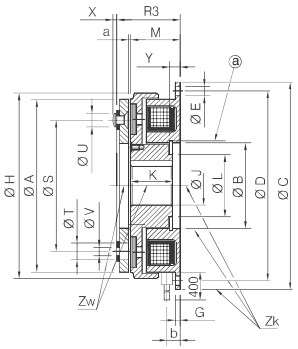

Design **1.5**

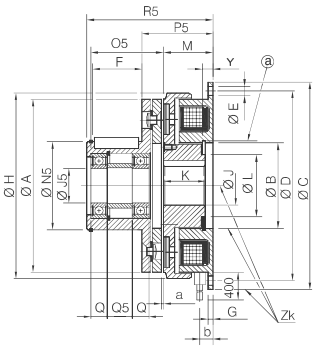

Tapped holes shown on dimension 'Z' on request,

Parameters

All dimensions are in mm

Size		06	08	10	12	16	20	25
Torque	M RAT. (Nm)	7.5	15	30	60	120	240	480
Max Speed	[min⁻¹]	8000	6000	5000	4000	3000	3000	2000
Input Power	P20 [w]	15	20	25	35	50	68	85
Inertia [kg cm²]	Rotor	1.19	2.66	7.8	22.6	63	205	547
	Armature 1	0.6	1.71	6.64	18	63.3	190	480
	Armature 3	0.42	1.18	4.72	13	48	137	358
	Armature 5	0.92	2.82	9.2	25.8	86.8	258	720
Permissible Misalignment	Zw (mm)	0.05	0.05	0.05	0.05	0.1	0.1	0.1
	Zk (mm)	0.1	0.15	0.15	0.1	0.2	0.2	0.25
	ØA	63	80	100	125	160	200	250
	ØB H8	35	42	52	62	80	100	125
	ØC h9	80	100	125	150	190	230	290
	ØD	72	90	112	137	175	215	270
	ØE	4 x 4.5	4 x 5.5	4 x 6.6	4 x 6.6	4 x 9	4 x 9	4 x 11
	F	17	22	27	36.5	44.4	53.4	83.5
	G	2	2.5	3	3.5	4	5	6
	ØH	68	85.5	107	134.3	170	214.3	266.5
	$ØJ_5$	12	15	20	25	30	40	45
	K	22	24	27	30	34	40	47
	ØL	23	28.5	40	45	62	77	100
	M	24	26.5	30	33.5	37.5	44	51
	$ØN_{js6}$	27	32	42	49	65	83	105
	ØN	38	45	55	64	75	90	115
	O	15	20	25	30	38	48	55
	O_5	22.7	32.2	39.4	51.5	63	77.9	91.9
	P	31.5	35	40.9	46.5	53.5	64.5	74.9
	P_5	31	35	40.9	46.5	53.5	65.4	74.9
	Q	8	9	12	12	13	15	19
	Q_5	4	5.5	6.5	18	28	34	38
	R_1	43	51	60.9	70.5	84.5	103.4	118.9
	R_3	28	31	35.9	40.5	46.5	55.4	63.9
	R_5	51	60	70.9	86.5	103.5	125.4	144.9
	ØS	46	60	76	96	120	158	210
	ØT	3 x 6.3	3 x 8	3 x 10.5	3 x 12	3 x 15	3 x 18	4 x 22
	ØU	3 x 5.5	3 x 7	3 x 9	3 x 10	3 x 13	3 x 16	4 x 20
	ØV	3 x 3.1	3 x 4.1	3 x 5.15	3 x 6.1	3 x 8.2	3 x 10.2	4 x 12.2
	X	1.4	1.7	2.1	2.5	3	4	4.3
	Y	3.5	4.3	5	5.5	6	7	8
	Z	5	6	6	10	10	15	20
	a	0.2	0.2	0.2	0.3	0.3	0.5	0.5
	b	5.7	6.5	7.9	7.1	9.1	12.4	14.9
	$ØJ^{H7}$ *	10	10	14	14	20	25	25
	$ØJ^{H7}$ **	11,14,15	14,19, 20	19, 24, 28	24, 34, 38	28, 38, 42	38,42, 48	50, 60, 70
	$ØJ^{H7}$ ***	17	22	30	40	50	65	80
	$ØJ_1^{H7}$ *	10	10	14	14	20	25	25
	$ØJ_1^{H7}$ **	11,12,14	14,17,19	19, 24, 28	25, 28, 34	28, 34, 38	38, 42, 48	40, 50, 60
	$ØJ_1^{H7}$ ***	17	20	30	35	45	60	80

Important :

- Standard voltages : **24** VDC; **96** VDC; **190** VDC (Other voltages on request.)
- **P** : Coil Power at 20° C
- Permissible voltage change **+5%** to **-10%**
- (*) J : 55 & 60
- J_1 : 55
- @Circlip grooves to DIN 472
- Keyways to IS : 2048 wherever possible otherwise to DIN Standard
- Also available following Brakes

Size	Torque
31	630
40	1250
50	2500

- **Please call us for more details.**

* pilot bore, no keyway
** Standard bores
*** Max. bores

Specifications are subject to change without notice.

e-mail: info@powermechengineering.in
M: 9940429288

e-mail: info@powermechengineering.in

POWERMECH ENGINEERING

Type **14.105** (Normally OFF)

Dimensions

Design **3.1**

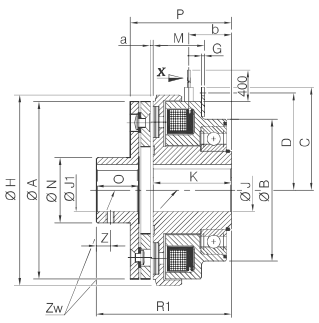

Design **3.3**

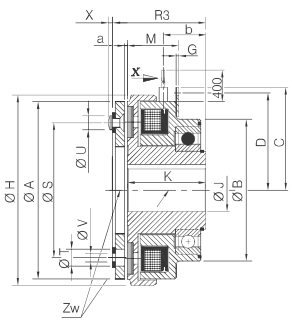

Design **3.5**

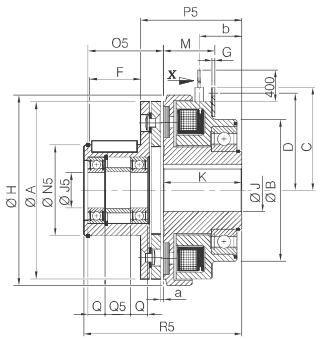

Tapped holes shown on dimension 'Z' on request,

Parameters

All dimensions are in mm

Size			06	08	10	12	16	20	25
Torque	M RAT, (Nm)		7.5	15	30	60	120	240	480
Max Speed	[min⁻¹]		8000	6000	5000	4000	3000	3000	2000
Input Power	P20 [w]		15	20	25	35	50	68	85
Inertia [kg cm²]	Rotor		1.33	2.94	8.66	24.6	69	215	566
	Armature	1	0.6	1.71	6.64	18	63.3	190	480
		3	0.42	1.18	4.72	13	48	137	358
		5	0.92	2.82	9.2	25.8	86.8	258	720
Permissible Misalignment		Zw (mm)	0.05	0.05	0.05	0.05	0.1	0.1	0.1
		ØA	63	80	100	125	160	200	250
		ØB	64	68	85	100	127	151.5	152.4
		C	41	50	61	72.5	99	119	145
		D	37	46	57	68.5	93	113	139
		E	4.1	4.1	4.1	4.1	8.1	8.1	8.1
		E_1	10	12	14	14	20	20	20
		F	17	22	27	36.5	44.4	53.4	63.5
		G	1.5	1.5	2.5	2.5	3.5	3.5	3.5
		ØH	68	85.5	107	134.3	170	214.3	266.5
		K	40	43.5	49	55	61.5	74	81
		M	26	28	32.5	36	41.7	48.1	55.2
		ØN	27	32	42	49	65	83	105
		$ØN_5K_5$	38	45	55	64	75	90	115
		O	15	20	25	30	38	48	55
		O_5	22.7	32.2	39.4	51.5	63	77.9	91.9
		P	47.5	52	60	68	77.5	94.4	105
		P_s	47	52	60	68	77.5	95.4	105
		Q	8	9	12	12	13	15	19
		Q	4	5.5	6.5	18	28	34	38
		R_1	59	68	90	92	108.5	133.5	149
		R_3	44	48	54.9	62	70.5	85.4	93.9
		R_5	67	77	90	108	127.5	155.4	175
		ØS	46	60	75	95	120	158	210
		ØT	3 x 6.3	3 x 8	3 x 10.5	3 x 12	3 x 15	3 x 18	4 x 22
		ØU	3 x 5.5	3 x 7	3 x 9	3 x 10	3 x 13	3 x 16	4 x 20
		ØV	3 x 3.1	3 x 4.1	3 x 5.15	3 x 6.1	3 x 8.2	3 x 10.2	4 x 12.2
		X	1.4	1.7	2.1	2.5	3	4	4.3
		Z	5	6	6	10	10	15	20
		a	0.2	0.2	0.2	0.3	0.3	0.5	0.5
		b	22	24	27.5	29.5	35	42.5	45.5
		$ØU^{H7}$ **	10,15	17, 20	20, 25, 30	20, 25, 30	25, 30, 40	38,42, 48	40, 45, 50
		***	20	25	30	40	50	65	60
		$ØJ_1^{H7}$ *	10	10	14	14	20	25	25
		**	10,12,15	14,17, 20	20, 25, 28	25, 28, 30	25, 28, 40	40, 45, 50	40, 50, 60
		***	17	20	30	35	45	60	80
		$ØJ_5^{H7}$	12	15	20	25	30	40	45

Important :

- Standard voltages : **24** VDC; **96** VDC; **190** VDC (Other voltages on request.)
- **P** : Coil Power at 20° C
- Permissible voltage change **+5%** to **-10%**
- @Circlip grooves to DIN 472
- Keyways to IS : 2048 wherever possible otherwise to DIN Standard
- Also available following Brakes

Size	Torque
31	630
40	1250
50	2500

- Please call us for more details.

* pilot bore, no keyway
** Standard bores
*** Max. bores

If clutch is engaged at 0 RPM, torque will be 30% - 35% than the rated torque

Specifications are subject to change without notice.

POWERMECH ENGINEERING

e-mail: info@powermechengineering.in

Operating Times*

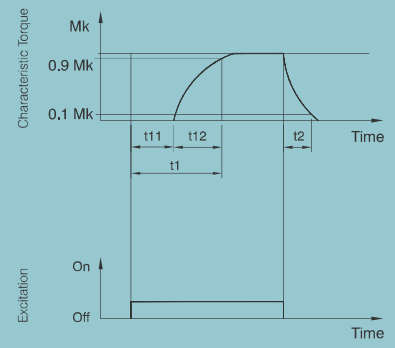

t1	Engagement Time	t11	Delay Time
t2	Disengagement Time	t12	Torque Rise Time

* *Average times measured with rated air-gaps.*

14.115

Brake Size	t11ms	t12ms	t1ms	t2ms
06	10	20	35	10
08	15	25	40	20
10	20	40	60	30
12	25	55	80	45
16	30	70	100	60
20	35	80	115	70
25	40	90	130	80

14.105

Clutch Size	t11ms	t12ms	t1ms	t2ms
06	15	30	45	10
08	20	55	75	15
10	25	85	110	25
12	35	105	140	40
16	45	125	170	50
20	60	140	200	60
25	75	155	230	70

Selection

1. Select basic brake according to the torque.

   Torque (Nm) = 9550 X (Motor kW / RPM) X Safety factor (K)

Load Condition	Safety Factor (K)
Low masses, equal loading & non - intermittent operation	2.0
Low masses, light shock load & intermittent operation	2.5
Medium masses, light shock load & intermittent operation	3.0
Large masses, light shock load & intermittent operation	3.0
Diesel engine drive	4-5
Compressor drive	5-6
Non overhauling Loads	2-3
Overhauling Loads	3-4

2. Describe the brake with the ordering parameter. (Type, size, operating voltage and hub bore)
3. Choose optional extras required (G pcd, tacho mounting provision, friction plate (instead of mounting flange), with microswitch).
4. Choose appropriate safety factor for the hoist, lift, inclined conveyors or equipment where holding against gravity is required.
5. Select proper Rectifier considering rated voltage of the brake. If coil operating voltage is 96 or 190 VDC you can use our rectifier (Call for product details).
6. Choose correct input AC voltage for rectifier.

Life

The life of friction liner depends on number of factors like, the inertia to be retarded or stopped, the relative speed, the operating frequency, the temperature at the friction surface etc. This brake must run dry. Oil, grease foreign materials, similar such lubricant affects the life and characteristics of friction materials. No general statement can be made about the life of friction materials.

Ph: 044 - 42614058, 24715461 www.powermechengineering.in M: 9940429288