POWERMECH ENGINEERING

E-mail: info@powermechengineering.com
Phones: 044 – 24715461, 044 - 42614058
Mobile.1: +91 99404 29288
Mobile.2: +91 89250 66613
Mobile.3: +91 96771 25589

SafeTrack

Shrouded DSL Busbar & Current Collectors:
Models: SF1, SF2, SF3, SFS, & MACC125 / MACC250.
Hanger clamps, Splice / Joint cover, End cap, Jointing Tool, Transfer funnel, Anchor clamp, End feed, Joint clip, Joint clamp (Copper / G.I, Aluminium), etc.

Hanger Clamps for Safetrack Shrouded DSL Conductor Bar System

1

Hanger Clamp – Single Pole - SF1

www.powermechengineering.com

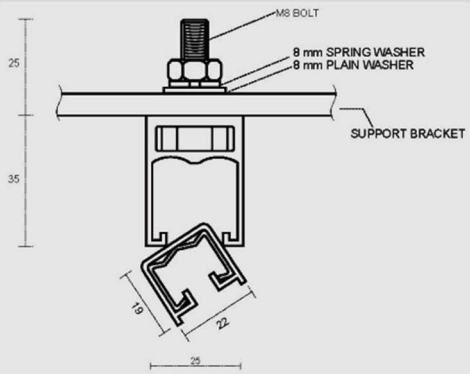

e-mail: info@powermechengineering.com

2

Nylon Hanger Clamp - Single Pole - SF1

www.powermechengineering.com

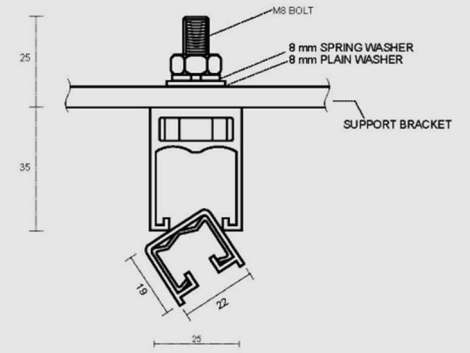

e-mail: info@powermechengineering.com

3

Hanger Clamp – Four Pole - SF1

www.powermechengineering.com

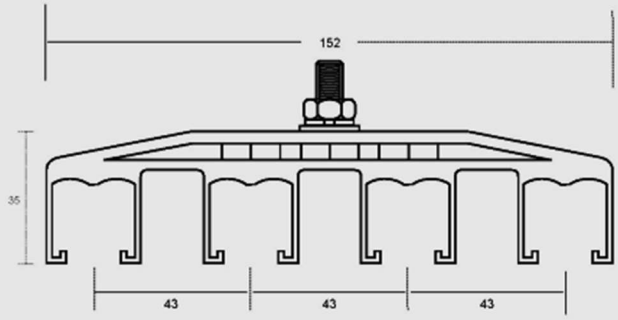

e-mail: info@powermechengineering.com

4

Hanger Clamp – Four Pole- SF2

www.powermechengineering.com

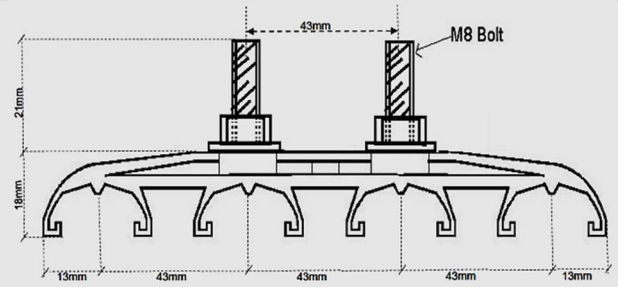

e-mail: info@powermechengineering.com

5

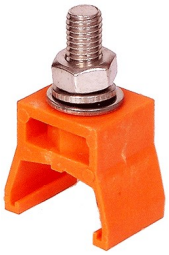

Nylon Hanger Clamp – SF2

6

Hanger Clamp – 3Pole – SF2

7

Hanger Clamp – SF3

8

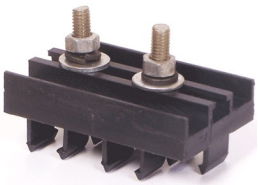

Hanger Clamp-14mm Centre -SFS4

9

Hanger Clamp-20mm Centre -SFS4